K 2000

Posizionatore a tavola rotante elevabile (corsa 600 mm), portata 1500 Kg. Rotazione con motore autofrenante a corrente continua, riduttore a vite senza fine e ralla a sfere. Inclinazione con motore elettrico (E)

Turntable type positioner, liftable (600 mm), maximum load 1500 Kg. Slewing by DC self braking motor through worm and ball slewing ring. Tilt: with electric motor (E)

Positionneur à table rotative, levage (600 mm), portée 1500 Kg. Rotation avec moteur auto maintenu à courant continu, réducteur à vis sans fin et butée à billes. Inclinaison avec moteur électrique (E)

Drehtisch-Positionervorrichtungen, Ausführung (600 mm), Tragkraft 1500 Kg. Rotation mit selbstbremsenden Gleichstrommotor, Endlosschneckenuntersetzung und Kugelscheibe. Schwenkung mit Elektromotor (E)

Posicionadores de mesa giratoria, elevable (600 mm), portal 1500 Kg. Rotaciòn por motor freno de corriente continua, reductor de tornillo sin fin y rangua de bolas. Inclinaciòn con motor electrico (E)

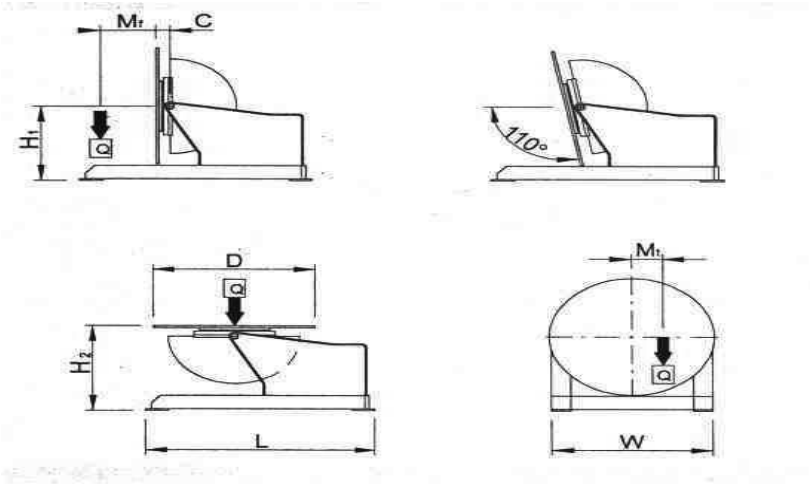

K 2000
Q kg = 1500
Mt daNm = 114
Mf daNm = 308
D mm = 900
H1 mm = 1420
H2 mm = 1530
C mm = 110
L mm = 1400
W mm = 1100
Rpm = 0.15-1.5
Sec. = 75
Volt. = 3x400
Volt. = 24
LxWxH2 mm = 1400x1100x1530
Kg = 1200

ITEM	DESCRIPTION	PRICE CHF
K 2000 E	Raisable turntable with electric tilt	45030.00
K/SOR	Stop at 360°; adjustable overwelding function and auto return to “ 0”	1550.00
BPT300 M	Pneumatically actuated torch arm for Mig welding	2945.00
BPT 300 T	Pneumatically actuated torch arm for Tig welding	3705.00
K/PMA	Single pedal control (start-stop) with 5mt. (197”) connection cable	228.00
K/TMA	Start-stop control with button and 5 mt. (197”) connection cable	342.00
K/TTA	Table delayed start device for TIG welding	988.00
K/VL	Display LCD	608.00
K/GR1	1-way rotating coupling for air or gas	551.00
K/GR2	2-way rotating coupling for water	646.00
K/SCH	Hi-frequency shielding	570.00

(*) surcharge valid only on ordering